■ Description

The JC54XXB series is a high input voltage (45V), low quiescent current (2.1uA), low-dropout linear regulator (LDO) able to provide 350mA load current. The JC54XXB family LDO offers EN pin to enable and disable the LDO output, EN pin can take 45V input voltage.

The LDO features very fast response against line voltage transient and load current transient, and ensures no overshoot voltage during the LDO start up and short circuit recovery.

The device features integrated short-circuit and thermal shutdown protection.

The device is available with fixed output voltages of 1.8V, 3.0V, 3.3V and 5.0V, and available in SOT23 and SOT89 packages.

■ Features

- Low Quiescent Current：2.1uA
- High Input Voltage Rating：Up to 55V
- High Output Current：350mA
- High PSRR：85dB at 1Khz
- Low Dropout Voltage：
  35mV@10mA
  350mV@100mA
- Fixed Output Voltages：
  1.8V, 3.0V, 3.3V and 5.0V
- High-accuracy Output Voltage: A: ±1% /B: ±2%
- Fast Transient Response
- Integrated Short-Circuit Protection
- Enable pin is available
- Integrated Thermal Protection
- Available Packages：

JC54XXBTE JC54XXBTE-A JC54XXBTE-B JC54XXBTE-C	SOT23-3
JC54XXBTS JC54XXBTS-A JC54XXBTS-B JC54XXBTS-C	SOT89-3
JC54XXBTG	SOT23-5

■ Application

- Battery-powered equipment
- Smoke detector and sensor
- Micro controller Applications
- Home Appliance

■ Application Circuits

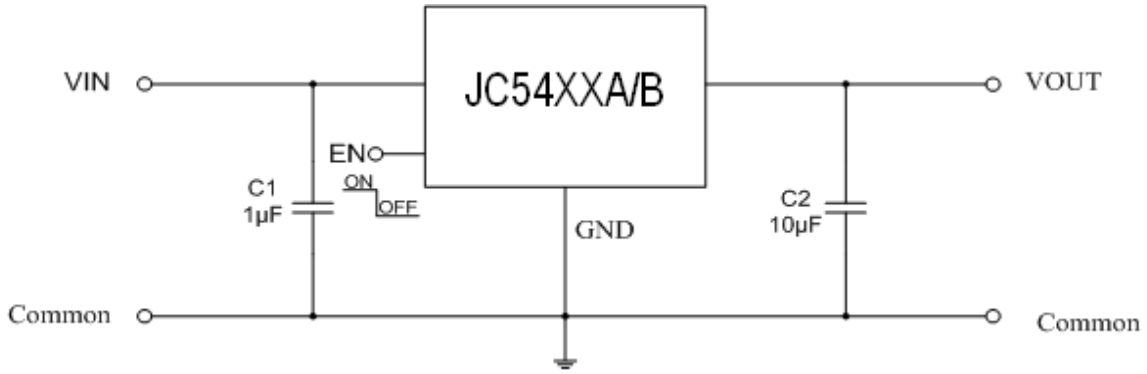

■ Packages And Pin Assignment

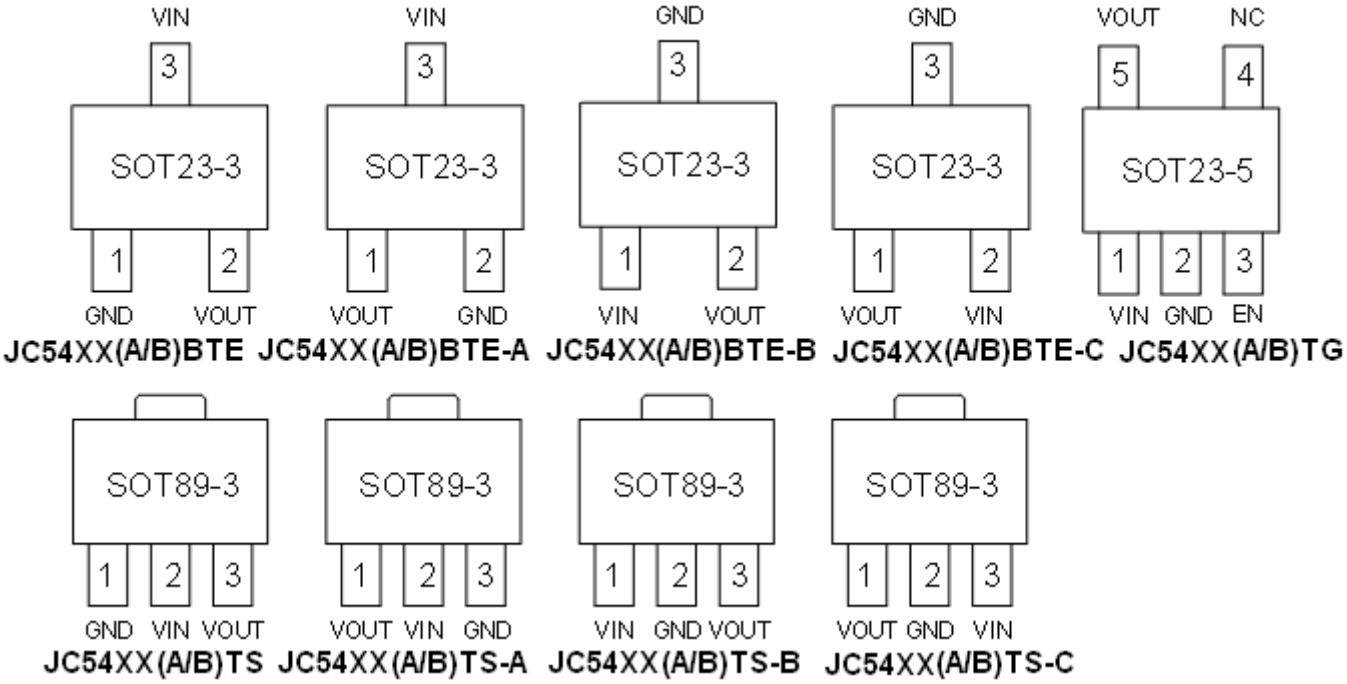

■ Pin Descriptions

SOT23-3				PIN NAME	DESCRIPTION
JC54XXBTE	JC54XXBTE-A	JC54XXBTE-B	JC54XXBTE-C		
1	2	3	3	GND	Ground Pin
2	1	2	1	VOUT	Output Pin
3	3	1	2	VIN	Input Pin
SOT89-3				PIN NAME	DESCRIPTION
JC54XXBTS	JC54XXBTS-A	JC54XXBTS-B	JC54XXBTS-C		
1	3	2	2	GND	Ground Pin
3	1	3	1	VOUT	Output Pin
2	2	1	3	VIN	Input Pin
SOT23-5				PIN NAME	DESCRIPTION
JC54XXBTG					
1				VIN	Input Pin
2				GND	Ground Pin
3				EN	Enable pin
4				NC	No Connection
5				VOUT	Output Pin

■ Functional Block Diagram

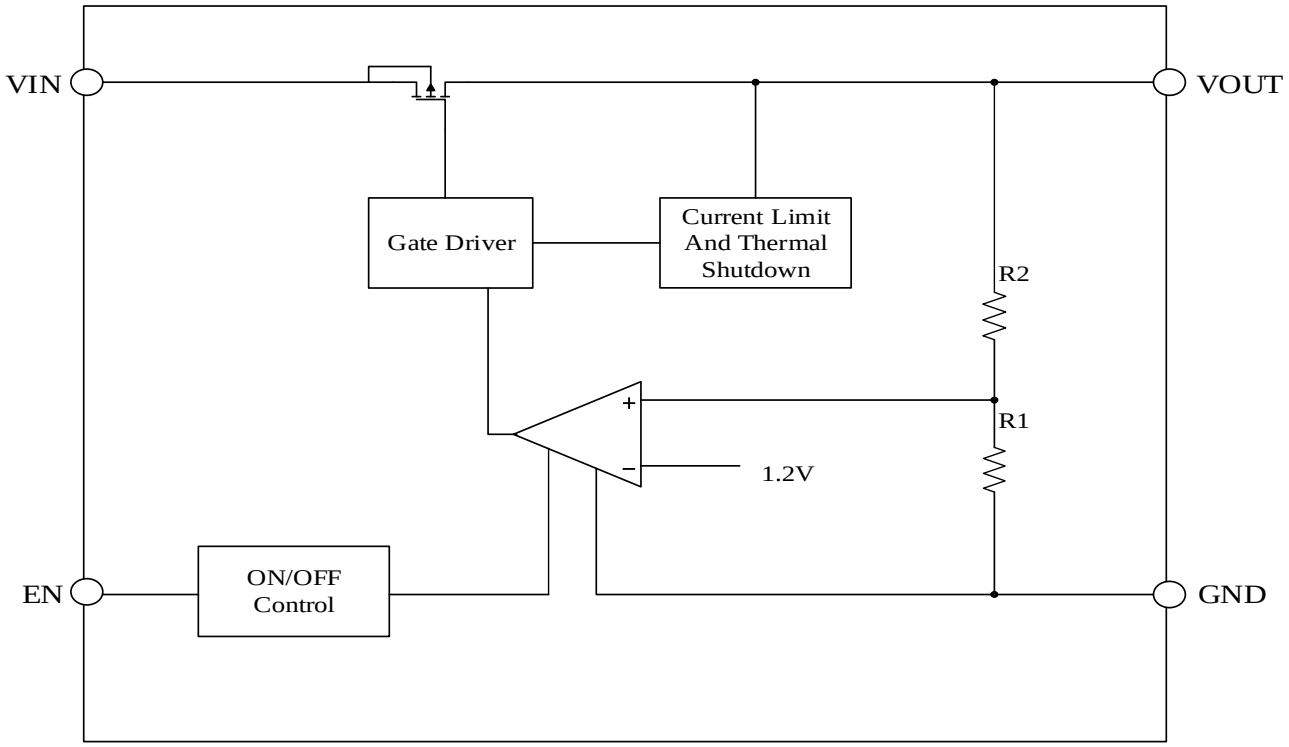

■ Absolute Maximum Ratings

Item	Description	Min	Max	Unit
Voltage	VIN to GND	-0.3	55	V
	VOUT to GND	-0.3	6	V
	VOUT to VIN	-55	0.3	V
	EN to GND	-0.3	55	V
Current	Peak output current	Internally limited		
Temperature	Operating Ambient Temperature	-40	85	℃
	Storage Temperature	-40	150	℃
	Operating virtual junction Temperature	-	150	℃
Thermal Resistance (Junction to Ambient)	SOT89	180		℃/W
	SOT23	360		℃/W
Power Dissipation	SOT89	600		mW
	SOT23	300		mW
Electrostatic discharge rating	Human Body Model（HBM）	4		kV
	Charged Device Model（MM）	100		V

■ Electrical Characteristics

(At T_A=25°C, C_{IN}=1uF, V_{IN}=V_{OUTNOM}+1.0V, C_{OUT}=10uF, unless otherwise noted)

Symbol	Parameter	Test Conditions	MIN	TYP	MAX	UNIT
VIN	Input Voltage		3	—	45	V
I_{GND}	Quiescent Current	V_{IN}=12V, No load	—	2.1	—	uA
VOUT	Output Voltage	V_{IN}=12V, I_{OUT}=10mA	V_{OUTNOM} * 0.98	V_{OUTNOM}	V_{OUTNOM} * 1.02	V
I_{OUT_MAX}	Output Current		300	350	—	mA
V_{DROP}	Dropout Voltage(1)	I_{OUT}=10mA , V_{IN}=V_{OUTNOM}-0.1V	—	35	—	mV
		I_{OUT}=100mA , V_{IN}=V_{OUTNOM}-0.1V	—	350	—	mV
$\Delta V_{OUT(\Delta IOUT)}$	Load Regulation	VIN=12V, 1mA≤I_{OUT}≤100mA	—	0.02	—	%/mA
$\Delta V_{OUT(\Delta VIN)}$	Line Regulation	IOUT=1mA, V_{OUTNOM}+0.5V≤V_{IN}≤40V	—	0.01	—	%/V
I_{LIMIT}	Current Limit		—	500	—	mA
T_{SHDN}	Thermal Shutdown Temperature	Shutdown, temperature increasing	—	150	—	℃
		Reset, temperature decreasing	—	140	—	
PSRR		Vin=12V , Iout=10mA F=1Khz,Vout=3.3V		85		dB
V_{ENH}	EN High level	Enabled	1	—	—	V
V_{ENL}	EN Low level	Shutdown	—	—	0.4	V

Note：(1) Dropout Voltage is the voltage difference between the input and the output at which the output voltage drops 2% below its nominal value.

■ Typical Performance Characteristics

Test Condition: $T_{A=}$25°C,Iout=1mA, C_{OUT}=10uF, unless otherwise noted

Output Voltage vs. Input Voltage

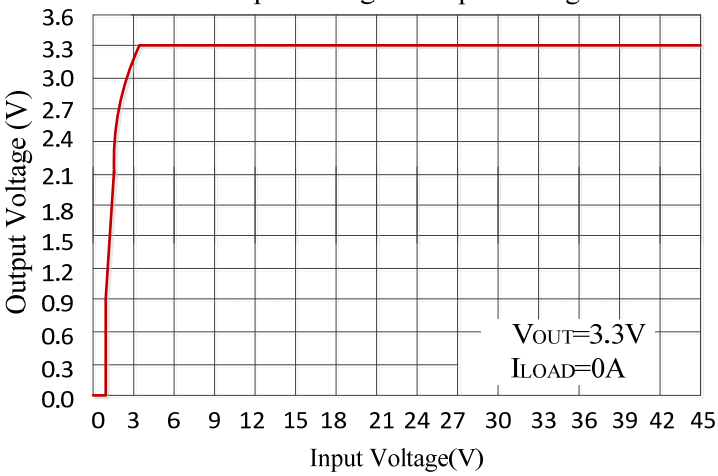

Output Voltage vs.Temperature

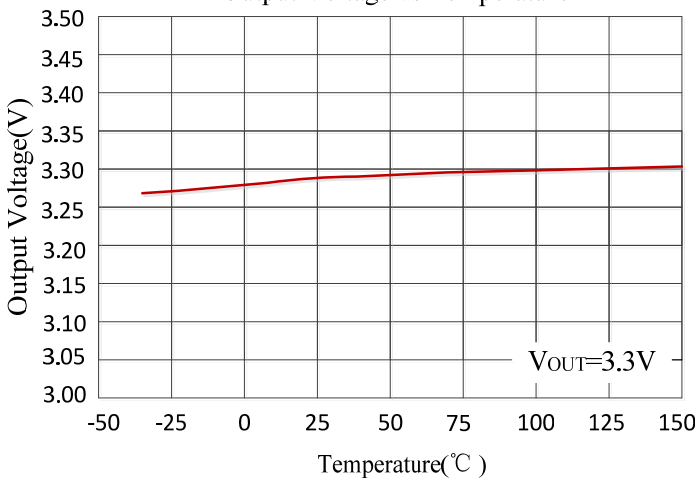

Dropout Voltage vs. Output Current

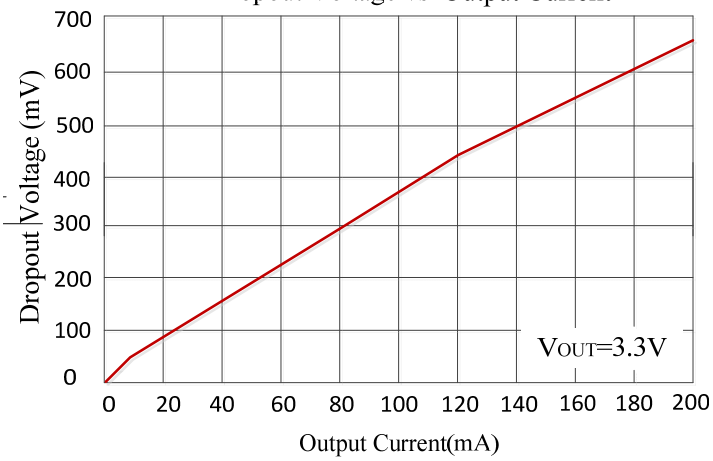

Quiescent Current vs.Temperature

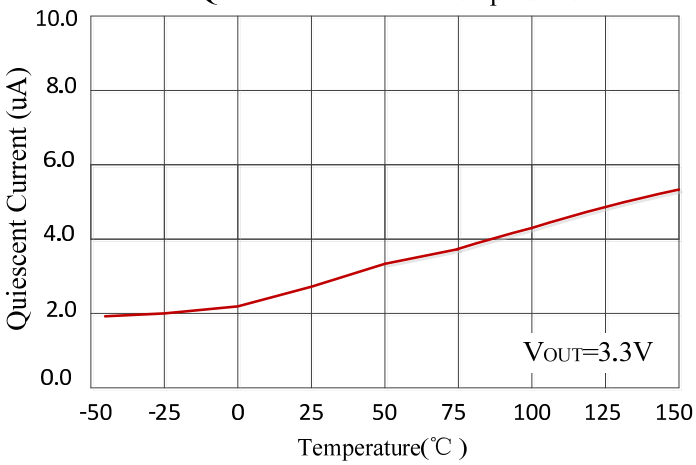

Quiescent Current vs. Input Voltage

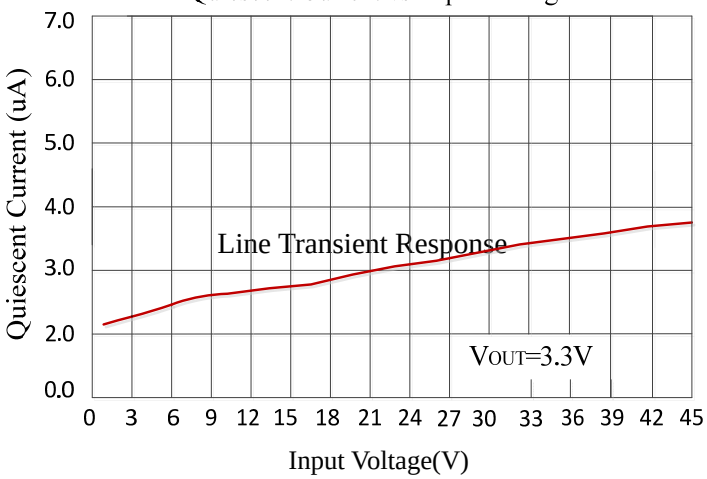

Power-Supply Rejection Ratio vs. Frequency

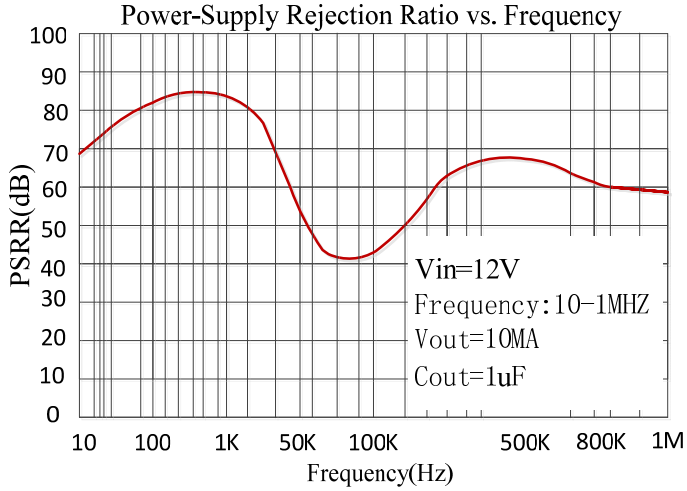

Line Transient Response

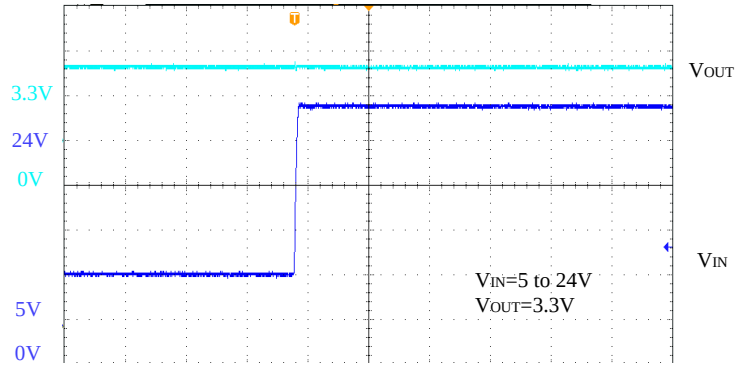

Time(4us/div)

Line Transient Response

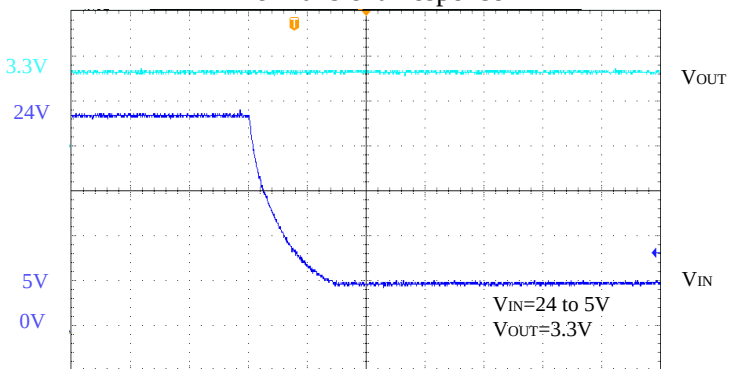

Time(4us/div)

Load Transient Response

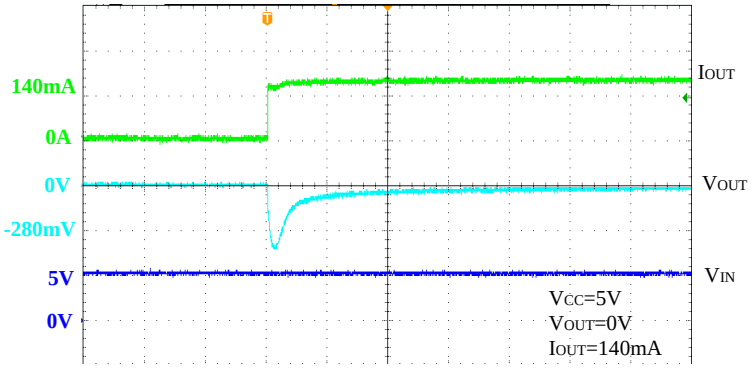

Time(20us/div)

Load Transient Response

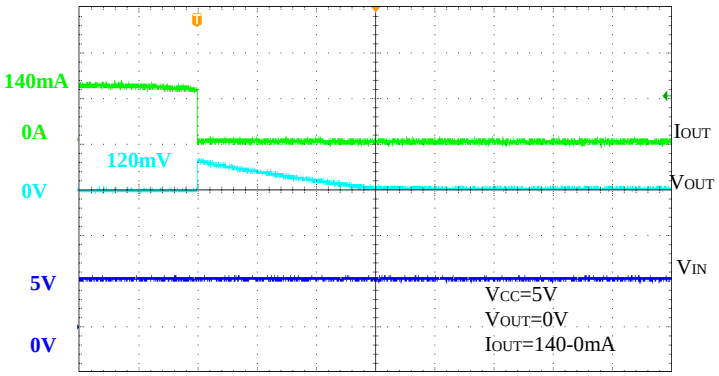

Time(200us/div)

Start Up

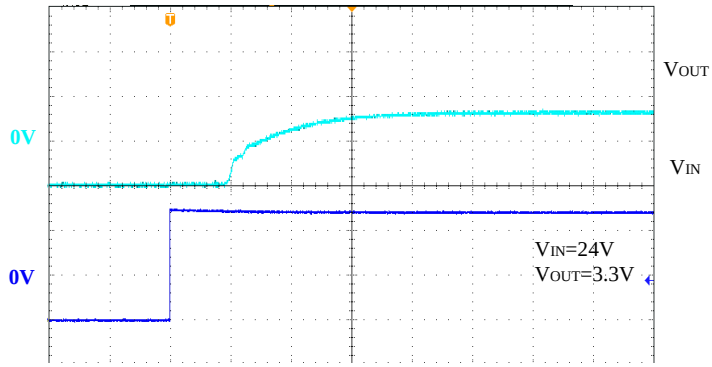

Time(100us/div)

Start Up

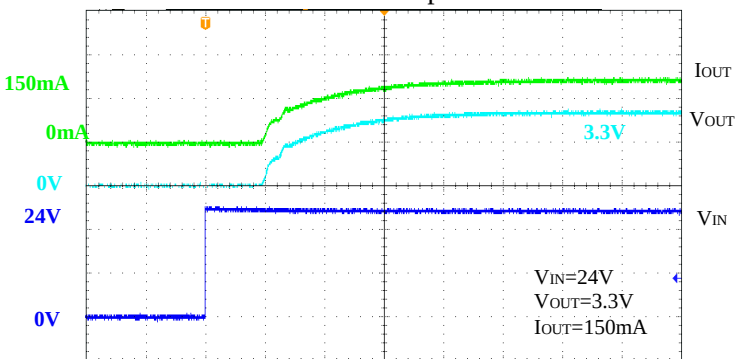

Time(100us/div)

Short Circuit Protection

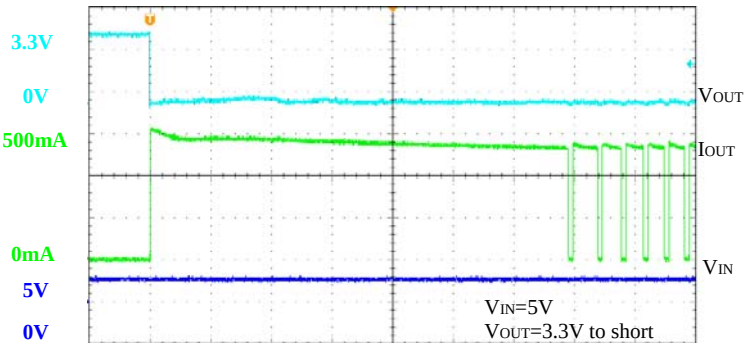

Time(20ms/div)

Short Circuit Protection

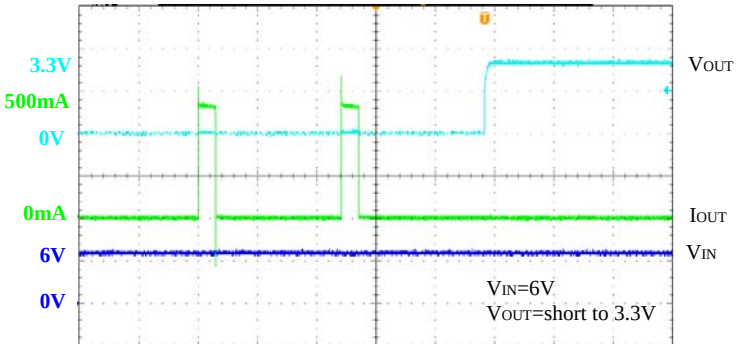

Time(2ms/div)

Functional Description

Input Capacitor

A 1µF ceramic capacitor is recommended to connect between VIN and GND pins to decouple input power supply glitch and noise. The amount of the capacitance may be increased without limit. This input capacitor must be located as close as possible to the device to assure input stability and less noise. For PCB layout, a wide copper trace is required for both VIN and GND.

Output Capacitor

An output capacitor is required for the stability of the LDO. The recommended minimum output capacitance is 1µF, ceramic capacitor is recommended, and temperature characteristics are X7R or X5R. Higher capacitance values help to improve load/line transient response. The output capacitance may be increased to keep low undershoot/overshoot. Place output capacitor as close as possible to VOUT and GND pins.

EN Pin Operation

The JC54XXB is turned on by setting the EN pin to “H”. Since the EN pin is neither pulled down nor pulled up internally, do not set it in floating status. When the EN pin is not used, connect the EN pin with VIN to keep the LDO in operating mode.

Current Limit and Short Circuit Protection

When output current at VOUT pin is higher than current limit threshold or the VOUT pin is direct short to GND, the current limit protection will be triggered and clamp the output current at a pre-designed level to prevent over-current and thermal damage.

Thermal Protection

The JC54XXB has internal thermal sense and protection circuits. When excessive power dissipation happens on the device, such as short circuit at the output pin or very heavy load current with a large voltage drop across the device, the internal thermal protection circuit will be triggered, and it will shut down the power MOSFET to prevent the LDO from damage. As soon as excessive thermal condition is removed and the temperature of the device drops down, the thermal protection circuit will lease the control of the power MOSFET, and the LDO device goes to normal operation.

■ Ordering And Marking Information

Part Number				
JC 5433BTS-A Pin definition Package definition Voltage accuracy Product Name Company Name	Package Outline	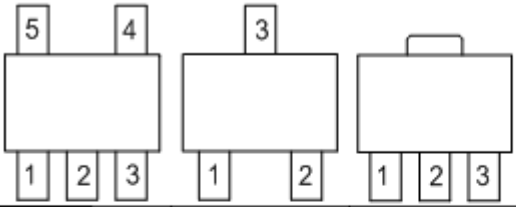		
	Minimum Package	SOT23-5 3000pcs/Reel	SOT23-3 3000pcs/Reel	SOT89-3 1000pcs/Reel
	Marking	M5433BA 1918R A:Pin definition B:B(±2%) A(±1%) C(±3%) 5433:5433(3.3V) 5418(1.8V) 5430(3.0V) 5450(5.0V) R:Internal Code.Variable. 1918:19-2019;18-the 18th week of this year M:M(SOT89-3) blank(SOT23)		

■ Package Outline Dimensions

SOT23-3

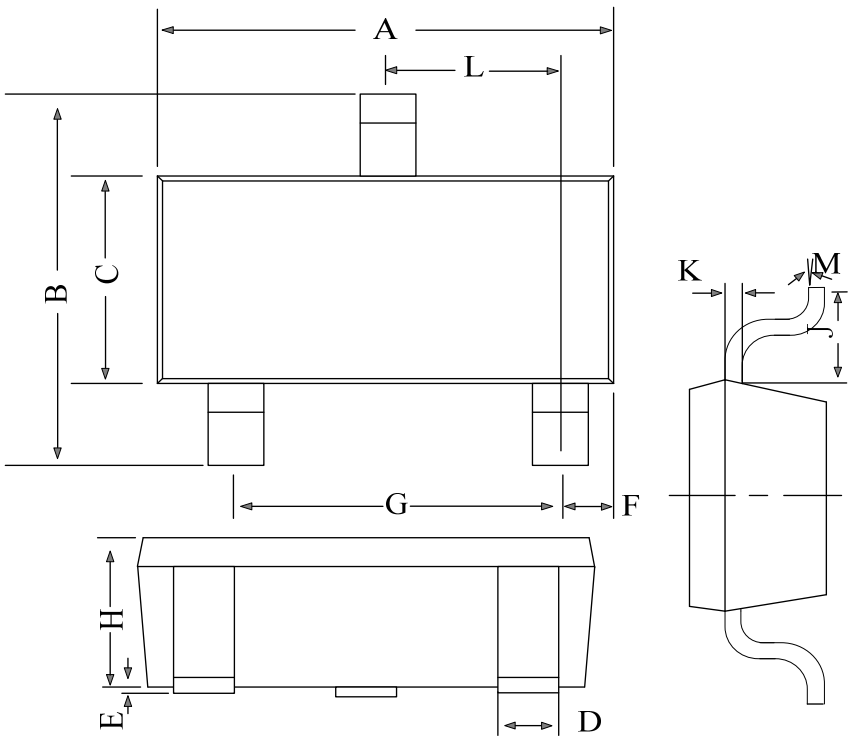

REF.	Millimeter	
	Min.	Max.
A	2.82	2.92
B	2.65	2.95
C	1.56	1.60
D	0.35	0.55
E	0	0.1
F	0.45	0.55
G	1.90	REF.
H	1.0	1.3
K	0.10	0.20
J	0.40	_
L	0.85	1.15
M	0°	10°

SOT89-3

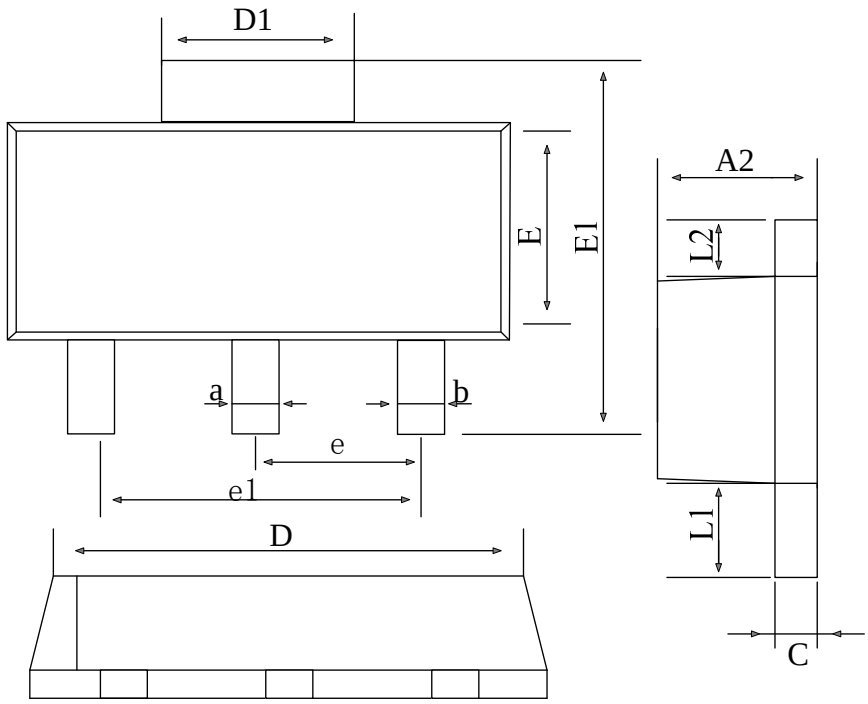

REF.	Millimeter	
	Min.	Max.
A2	1.4	1.6
a	0.45	0.55
b	0.38	0.48
c	0.36	0.46
D	4.40	4.60
D1	1.60	1.80
E	2.40	2.60
E1	4.00	4.30
e	1.00	2.00
e1	2.95	3.05
L1	0.80	1.00
L2	0.65	0.75

SOT23-5

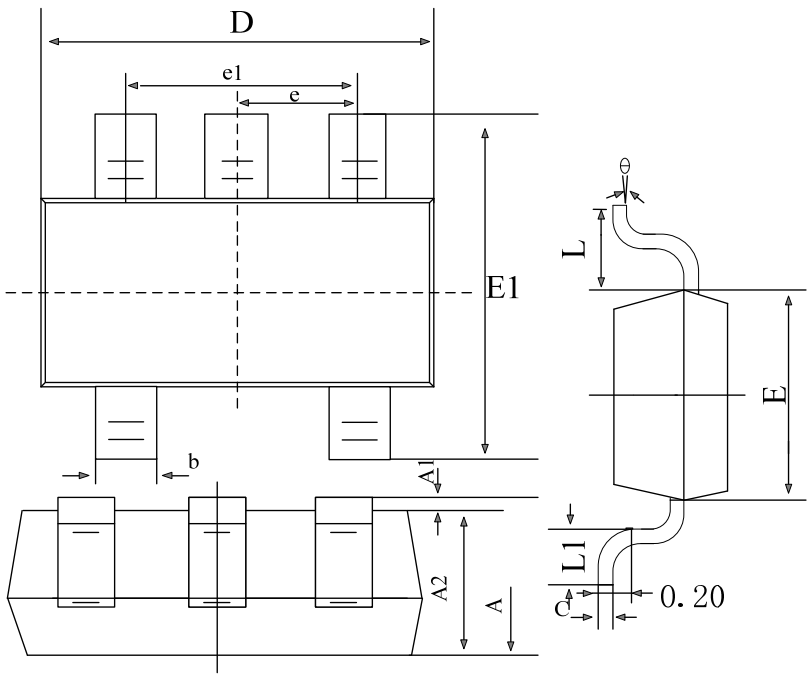

REF.	Millimeter	
	Min.	Max.
A	1.05	1.25
A1	0	0.1
A2	1.05	1.15
b	0.3	0.5
c	0.1	0.2
D	2.85	3.05
E	1.5	1.7
E1	2.65	2.95
e	0.95(BSC)	
e1	1.8	2.0
L	0.3	0.6
θ	0^0	8^0

■ Packing Information

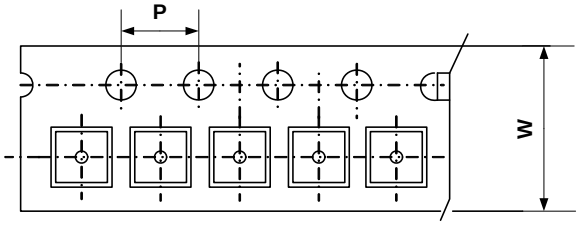

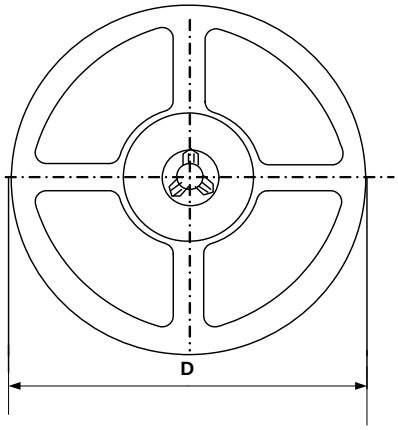

Type	W(mm)	P(mm)	D(mm)	Qty (pcs)
SOT23-3	8.0±0.1 mm	4.0±0.1 mm	180±1 mm	3000pcs
SOT23-5	8.0±0.1 mm	4.0±0.1 mm	180±1 mm	3000pcs
SOT89-3	12.0±0.1 mm	4.0±0.1 mm	180±1 mm	1000pcs