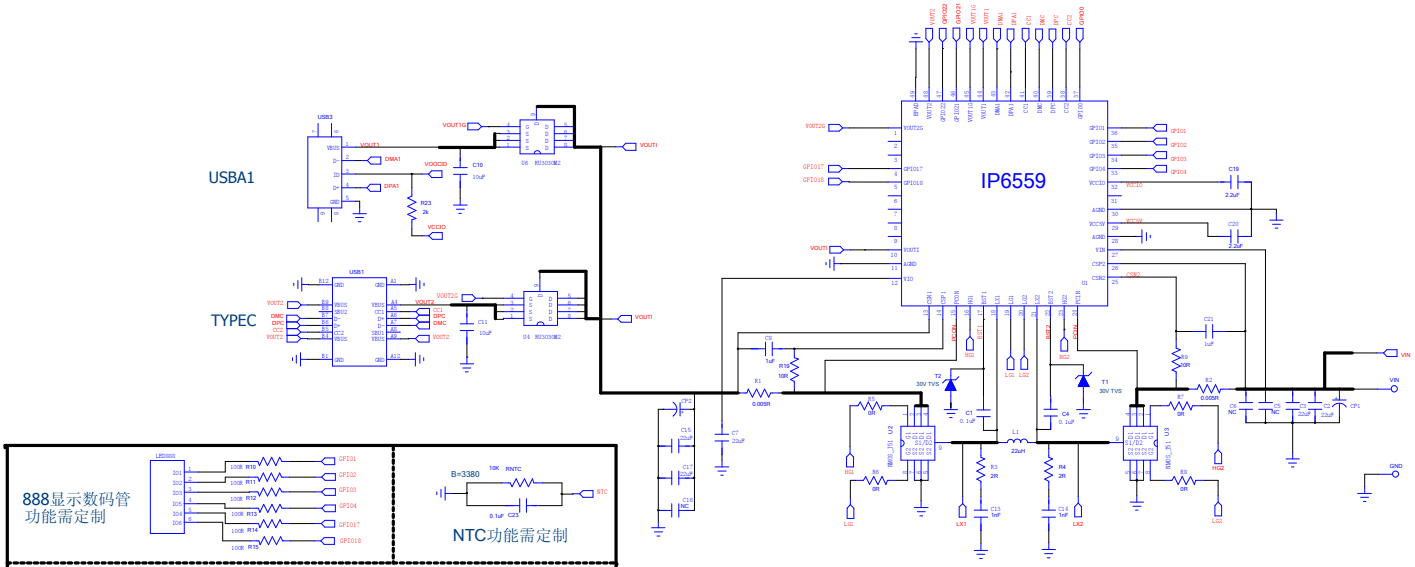

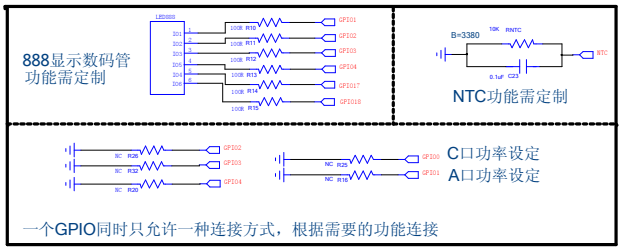

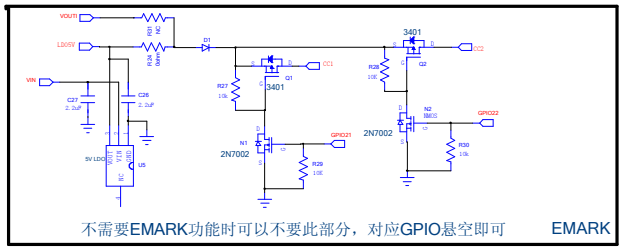

TITLE:	IP6559_AC_V2.1.sch		
DRAWM:	CHENGXI	DATED:	