# 内六角螺栓 节选自JIS B 1176：2015

Hexagon Socket Head Cap Screws

## 内六角螺栓的形状和尺寸

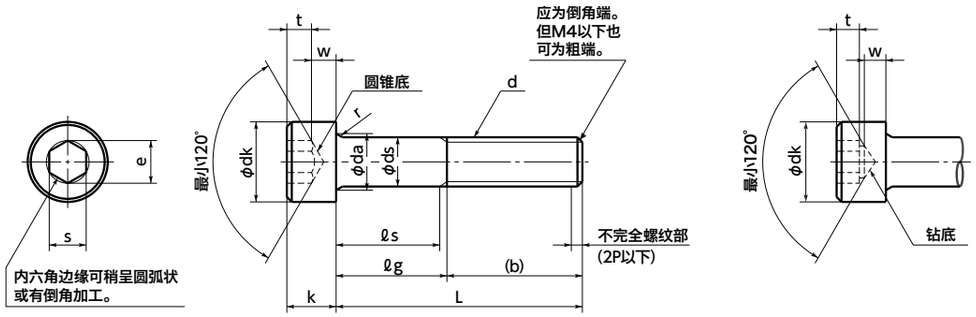


单位：mm

| 螺纹公称直径(d) | | M1.6 | M2 | M2.5 | M3 | M4 | M5 | M6 | M8 | M10 | M12 | M16 | M20 | M24 |
|---|---|---|---|---|---|---|---|---|---|---|---|---|---|---|
| 螺距 | | 0.35 | 0.4 | 0.45 | 0.5 | 0.7 | 0.8 | 1 | 1.25 | 1.5 | 1.75 | 2 | 2.5 | 3 |
| b*1 | (参考) | 15 | 16 | 17 | 18 | 20 | 22 | 24 | 28 | 32 | 36 | 44 | 52 | 60 |
| $d_k$ | 最大*2 | 3.00 | 3.8 | 4.5 | 5.5 | 7 | 8.5 | 10 | 13 | 16 | 18 | 24 | 30 | 36 |
| | 最大*3 | 3.14 | 3.98 | 4.68 | 5.68 | 7.22 | 8.72 | 10.22 | 13.27 | 16.27 | 18.27 | 24.33 | 30.33 | 36.39 |
| | 最小 | 2.86 | 3.62 | 4.32 | 5.32 | 6.78 | 8.28 | 9.78 | 12.73 | 15.73 | 17.73 | 23.67 | 29.67 | 35.61 |
| $d_a$ | 最大 | 2 | 2.6 | 3.1 | 3.6 | 4.7 | 5.7 | 6.8 | 9.2 | 11.2 | 13.7 | 17.7 | 22.4 | 26.4 |
| $d_s$ | 最大 | 1.60 | 2 | 2.5 | 3 | 4 | 5 | 6 | 8 | 10 | 12 | 16 | 20 | 24 |
| | 最小 | 1.46 | 1.86 | 2.36 | 2.86 | 3.82 | 4.82 | 5.82 | 7.78 | 9.78 | 11.73 | 15.73 | 19.67 | 23.67 |
| e | 最小*4*5 | 1.733 | 1.733 | 2.303 | 2.873 | 3.443 | 4.583 | 5.723 | 6.863 | 9.149 | 11.429 | 15.996 | 19.437 | 21.734 |
| k | 最大 | 1.60 | 2 | 2.5 | 3 | 4 | 5 | 6 | 8 | 10 | 12 | 16 | 20 | 24 |
| | 最小 | 1.46 | 1.86 | 2.36 | 2.86 | 3.82 | 4.82 | 5.70 | 7.64 | 9.64 | 11.57 | 15.57 | 19.48 | 23.48 |
| r | 最小 | 0.1 | 0.1 | 0.1 | 0.1 | 0.2 | 0.2 | 0.25 | 0.4 | 0.4 | 0.6 | 0.6 | 0.8 | 0.8 |
| s*5 | 公称直径 | 1.5 | 1.5 | 2 | 2.5 | 3 | 4 | 5 | 6 | 8 | 10 | 14 | 17 | 19 |
| | 最大 | 1.58 | 1.58 | 2.08 | 2.58 | 3.08 | 4.095 | 5.14 | 6.14 | 8.175 | 10.175 | 14.212 | 17.23 | 19.275 |
| | 最小 | 1.52 | 1.52 | 2.02 | 2.52 | 3.02 | 4.02 | 5.02 | 6.02 | 8.025 | 10.025 | 14.032 | 17.05 | 19.065 |
| t | 最小 | 0.7 | 1 | 1.1 | 1.3 | 2 | 2.5 | 3 | 4 | 5 | 6 | 8 | 10 | 12 |
| v | 最大 | 0.16 | 0.2 | 0.25 | 0.3 | 0.4 | 0.5 | 0.6 | 0.8 | 1 | 1.2 | 1.6 | 2 | 2.4 |
| $d_w$ | 最小 | 2.72 | 3.48 | 4.18 | 5.07 | 6.53 | 8.03 | 9.38 | 12.33 | 15.33 | 17.23 | 23.17 | 28.87 | 34.81 |
| w | 最小 | 0.55 | 0.55 | 0.85 | 1.15 | 1.4 | 1.9 | 2.3 | 3.3 | 4 | 4.8 | 6.8 | 8.6 | 10.4 |

*1 适用于粗阶梯线之间没有阴影的数值。

*2 适用于没有滚花的头部。

*3 适用于有滚花的头部。

*4 $e_{min} = 1.14\ s_{min}$

*5 六角孔的尺寸s及e的仪表检查依据JIS B 1016。

单位：mm

| 螺纹公称直径(d) | | | M1.6 | | M2 | | M2.5 | | M3 | | M4 | | M5 | | M6 | | M8 | | M10 | | M12 | | M16 | | M20 | | M24 | |
|---|---|---|---|---|---|---|---|---|---|---|---|---|---|---|---|---|---|---|---|---|---|---|---|---|---|---|---|---|
| L* | | | ℓs及ℓg | | | | | | | | | | | | | | | | | | | | | | | | | |
| 公称直径长度 | min | max | ℓs min | ℓg max | ℓs min | ℓg max | ℓs min | ℓg max | ℓs min | ℓg max | ℓs min | ℓg max | ℓs min | ℓg max | ℓs min | ℓg max | ℓs min | ℓg max | ℓs min | ℓg max | ℓs min | ℓg max | ℓs min | ℓg max | ℓs min | ℓg max | ℓs min | ℓg max |
| 2.5 | 2.3 | 2.7 | | | | | | | | | | | | | | | | | | | | | | | | | | |
| 3 | 2.8 | 3.2 | | | | | | | | | | | | | | | | | | | | | | | | | | |
| 4 | 3.76 | 4.24 | | | | | | | | | | | | | | | | | | | | | | | | | | |
| 5 | 4.76 | 5.24 | | | | | | | | | | | | | | | | | | | | | | | | | | |
| 6 | 5.76 | 6.24 | | | | | | | | | | | | | | | | | | | | | | | | | | |
| 8 | 7.71 | 8.29 | | | | | | | | | | | | | | | | | | | | | | | | | | |
| 10 | 9.71 | 10.29 | | | | | | | | | | | | | | | | | | | | | | | | | | |
| 12 | 11.65 | 12.35 | | | | | | | | | | | | | | | | | | | | | | | | | | |
| 16 | 15.65 | 16.35 | | | | | | | | | | | | | | | | | | | | | | | | | | |
| 20 | 19.58 | 20.42 | | | 2 | 4 | | | | | | | | | | | | | | | | | | | | | | |
| 25 | 24.58 | 25.42 | | | | | 5.75 | 8 | 4.5 | 7 | | | | | | | | | | | | | | | | | | |
| 30 | 29.58 | 30.42 | | | | | | | 9.5 | 12 | 6.5 | 10 | 4 | 8 | | | | | | | | | | | | | | |
| 35 | 34.5 | 35.5 | | | | | | | | | 11.5 | 15 | 9 | 13 | 6 | 11 | | | | | | | | | | | | |
| 40 | 39.5 | 40.5 | | | | | | | | | 16.5 | 20 | 14 | 18 | 11 | 16 | 5.75 | 12 | | | | | | | | | | |
| 45 | 44.5 | 45.5 | | | | | | | | | | | 19 | 23 | 16 | 21 | 10.75 | 17 | 5.5 | 13 | | | | | | | | |
| 50 | 49.5 | 50.5 | | | | | | | | | | | 24 | 28 | 21 | 26 | 15.75 | 22 | 10.5 | 18 | | | | | | | | |
| 55 | 54.4 | 55.6 | | | | | | | | | | | | | 26 | 31 | 20.75 | 27 | 15.5 | 23 | 10.25 | 19 | | | | | | |
| 60 | 59.4 | 60.6 | | | | | | | | | | | | | 31 | 36 | 25.75 | 32 | 20.5 | 28 | 15.25 | 24 | | | | | | |
| 65 | 64.4 | 65.6 | | | | | | | | | | | | | | | 30.75 | 37 | 25.5 | 33 | 20.25 | 29 | 11 | 21 | | | | |
| 70 | 69.4 | 70.6 | | | | | | | | | | | | | | | 35.75 | 42 | 30.5 | 38 | 25.25 | 34 | 16 | 26 | | | | |
| 80 | 79.4 | 80.6 | | | | | | | | | | | | | | | 45.75 | 52 | 40.5 | 48 | 35.25 | 44 | 26 | 36 | 15.5 | 28 | | |
| 90 | 89.3 | 90.7 | | | | | | | | | | | | | | | | | 50.5 | 58 | 45.25 | 54 | 36 | 46 | 25.5 | 38 | 15 | 30 |
| 100 | 99.3 | 100.7 | | | | | | | | | | | | | | | | | 60.5 | 68 | 55.25 | 64 | 46 | 56 | 35.5 | 48 | 25 | 40 |
| 110 | 109.3 | 110.7 | | | | | | | | | | | | | | | | | | | 65.25 | 74 | 56 | 66 | 45.5 | 58 | 35 | 50 |
| 120 | 119.3 | 120.7 | | | | | | | | | | | | | | | | | | | 75.25 | 84 | 66 | 76 | 55.5 | 68 | 45 | 60 |
| 130 | 129.2 | 130.8 | | | | | | | | | | | | | | | | | | | | | 76 | 86 | 65.5 | 78 | 55 | 70 |
| 140 | 139.2 | 140.8 | | | | | | | | | | | | | | | | | | | | | 86 | 96 | 75.5 | 88 | 65 | 80 |
| 150 | 149.2 | 150.8 | | | | | | | | | | | | | | | | | | | | | 96 | 106 | 85.5 | 98 | 75 | 90 |
| 160 | 159.2 | 160.8 | | | | | | | | | | | | | | | | | | | | | 106 | 116 | 95.5 | 108 | 85 | 100 |
| 180 | 179.2 | 180.8 | | | | | | | | | | | | | | | | | | | | | | | 115.5 | 128 | 105 | 120 |
| 200 | 199.075 | 200.9 | | | | | | | | | | | | | | | | | | | | | | | 135.5 | 148 | 125 | 140 |

*一般使用的公称长度范围在粗阶梯线之间。带有阴影的数值为全螺纹，颈部的不完全螺纹部长度应在3P以内。

没有阴影的数值表示ℓg及ℓs的值，可用下式求出。

ℓg max＝ℓnom-b、ℓs min＝ℓg max-5P



NBK ▶0512-5290-1560 ▶info@nbk1560-chn.com.cn ▶http://www.nbk1560-chn.com.cn/